WESLEY

MADE BY JOHANNUS

SCHEMATIC DIAGRAMS

P R E S T O

ALTERATIONS RESERVED

WESLEY Organs b.v.

Morsestraat 28 - 6716 AH Ede - Tel. (08380) 37403 - Fax (08380) 22238

CONTENTS

1. BLOCK DIAGRAM

2. POSITION DIAGRAM CARDS (TOPVIEW) & EXTERNAL CONNECTIONS (mounted on the rearside of the organ)

3. PINNING BUS CARD CONNECTORS

4. TRANSFORMER CONNECTIONS & POWER SUPPLY

5. SCANNING KEYING & TRANSPOSER

6. STOP-BANK & SWITCH-BANK CAPTURE SYSTEM

7. INPUT CIRCUIT SCANNING KEYING & TRANSPOSER (master processor)

8. INPUT CIRCUIT STOPS & CAPTURE SYSTEM (master processor)

9. C.P.U. (master processor)

10. PROCESSOR CARD

11. GENERATOR CARD

12. VOICE CARD

13. VOLUMECONTROLS; HEADPHONES CONNECTIONS & ECHO INTERFACE (ota card)

14. EXPRESSION PEDAL CIRCUIT (ota card)

15. AMPLIFIER CARD

16. POSITION DIAGRAM ADJUSTMENTS INTERNAL POTENTIOMETERS

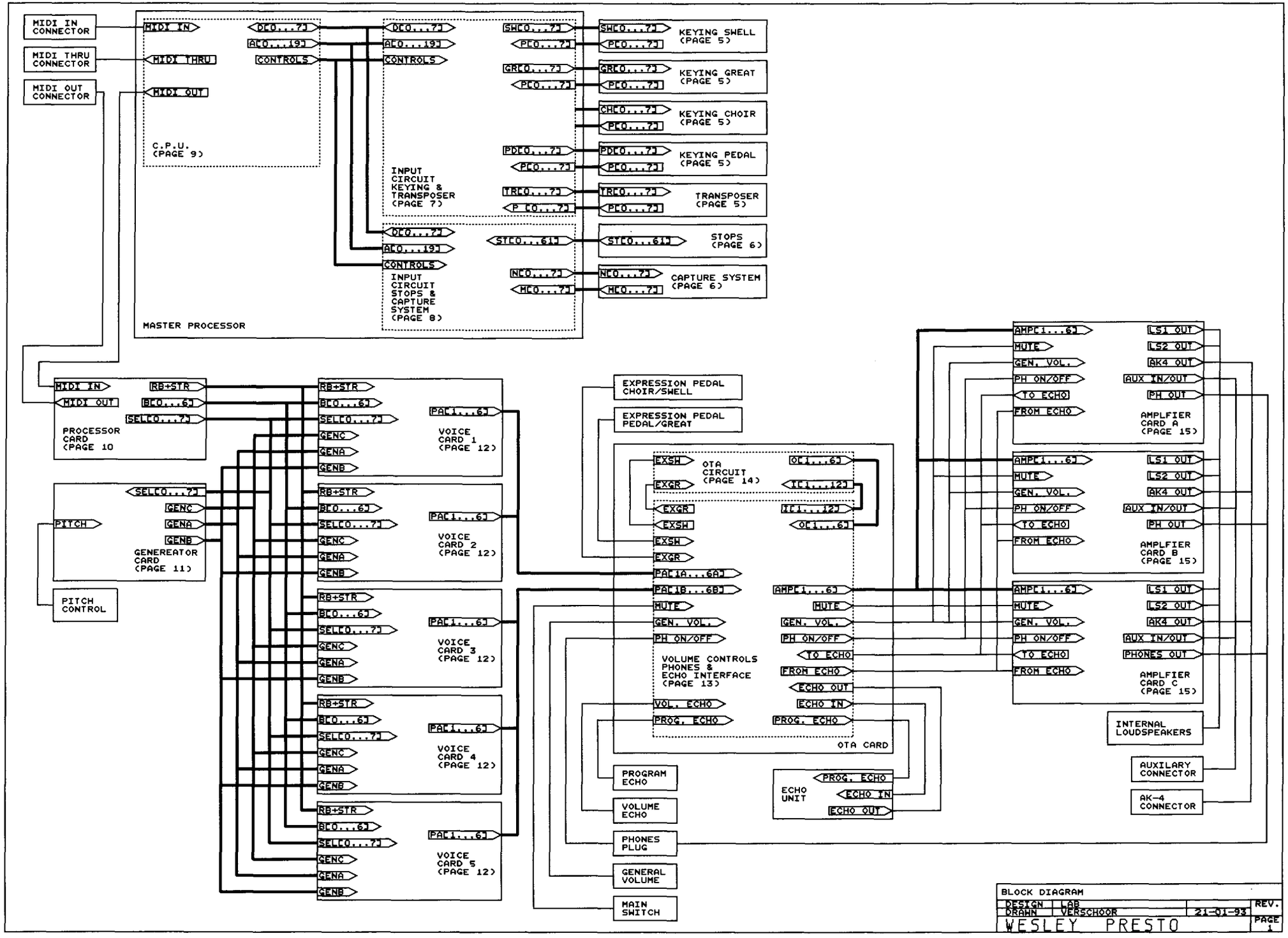
MIDI IN CONNECTOR
MIDI THRU CONNECTOR
MIDI OUT CONNECTOR
MIDI IN
MIDI THRU
MIDI OUT
C.P.U. (PAGE 9)
D[0...7]
A[0...19]
CONTROLS
INPUT CIRCUIT KEYING & TRANSPOSER (PAGE 7)
SW[0...7]
P[0...7]
GR[0...7]
CH[0...7]
PD[0...7]
TR[0...7]
P [0...7]
INPUT CIRCUIT STOPS & CAPTURE SYSTEM (PAGE 8)
ST[0...61]
N[0...7]
M[0...7]
KEYING SWELL (PAGE 5)
KEYING GREAT (PAGE 5)
KEYING CHOIR (PAGE 5)
KEYING PEDAL (PAGE 5)
TRANSPOSER (PAGE 5)
STOPS (PAGE 6)
CAPTURE SYSTEM (PAGE 6)
MASTER PROCESSOR
MIDI IN
MIDI OUT
RB+STR
B[0...6]
SEL[0...7]
PROCESSOR CARD (PAGE 10
PITCH
GEN C
GEN A
GEN B
GENEREATOR CARD (PAGE 11)
PITCH CONTROL
PA[1...6]
VOICE CARD 1 (PAGE 12)
VOICE CARD 2 (PAGE 12)
VOICE CARD 3 (PAGE 12)
VOICE CARD 4 (PAGE 12)
VOICE CARD 5 (PAGE 12)
EXPRESSION PEDAL CHOIR/SWELL
EXPRESSION PEDAL PEDAL/GREAT
EXSW
EXGR
OTA CIRCUIT (PAGE 14)
O[1...6]
I[1...12]
PA[1A...6A]
PA[1B...6B]
MUTE
GEN. VOL.
PH ON/OFF
VOLUME CONTROLS PHONES & ECHO INTERFACE (PAGE 13)
VOL. ECHO
PROG. ECHO
TO ECHO
FROM ECHO
ECHO OUT
ECHO IN
OTA CARD
PROGRAM ECHO
VOLUME ECHO
PHONES PLUG
GENERAL VOLUME
MAIN SWITCH
ECHO UNIT
AMP[1...6]
LS1 OUT
LS2 OUT
AK4 OUT
AUX IN/OUT
PH OUT
AMPLFIER CARD A (PAGE 15)
AMPLFIER CARD B (PAGE 15)
PHONES OUT
AMPLFIER CARD C (PAGE 15)
INTERNAL LOUDSPEAKERS
AUXILARY CONNECTOR
AK-4 CONNECTOR
BLOCK DIAGRAM
DESIGN LAB
DRAWN VERSCHOOR
21-01-93
REV.
WESLEY PRESTO
PAGE 1

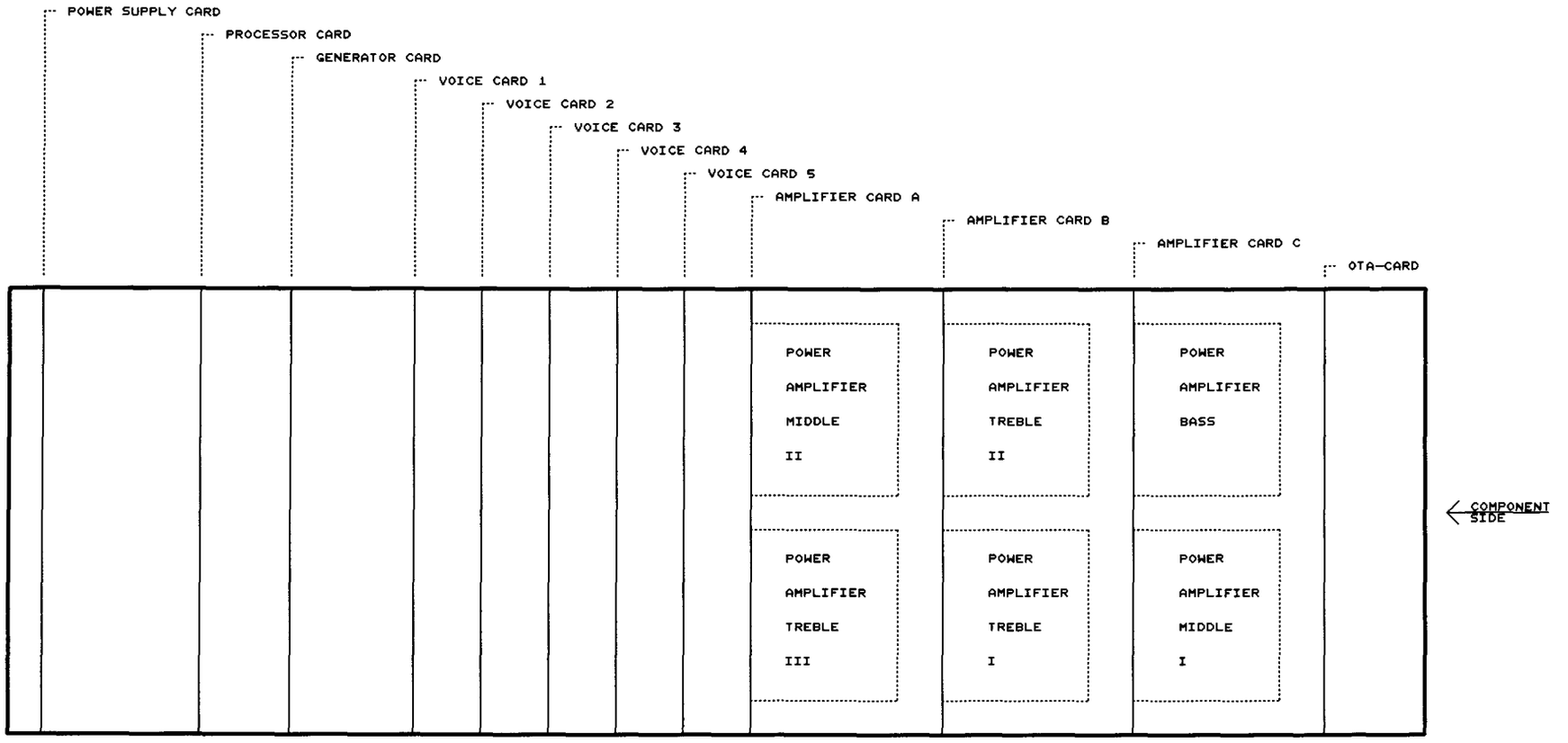

1. NOT CONNECTED
2. NOT CONNECTED
3. NOT CONNECTED
4. +5V MIDI IN
5. MIDI IN

MIDI IN

1. NOT CONNECTED
2. NOT CONNECTED
3. NOT CONNECTED
4. +5V MIDI THRU
5. MIDI THRU

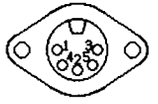

MIDI THRU

1. NOT CONNECTED
2. NOT CONNECTED
3. NOT CONNECTED
4. +5V MIDI OUT
5. MIDI OUT

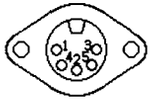

MIDI OUT

SOLDERINGSIDE VIEW

1. AK-4 OUT CHANNEL A
2. GROUND
3. NOT CONNECTED
4. AK-4 OUT CHANNEL B
5. NOT CONNECTED

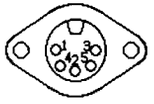

AK-4 OUT

1. AUX OUT CHANNEL A
2. GROUND
3. AUX IN CHANNEL A
4. AUX OUT CHANNEL B
5. AUX IN CHANNEL B

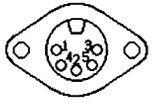

AUX IN/OUT

1. - MIDDLE II AMPLIFIER
2. + MIDDLE II AMPLIFIER
3. - TREBLE I AMPLIFIER
4. + TREBLE I AMPLIFIER
5. - TREBLE II AMPLIFIER
6. + TREBLE II AMPLIFIER
7. - TREBLE III AMPLIFIER
8. + TREBLE III AMPLIFIER

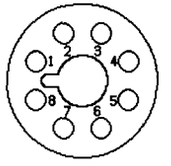

LS OUT A

1. - BASS AMPLIFIER
2. + BASS AMPLIFIER
3. - MIDDLE I AMPLIFIER
4. + MIDDLE I AMPLIFIER

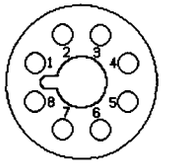

LS OUT B

(OPTIONAL)

POSITION DIAGRAM CARDS (TOPVIEW) & EXTERNAL CONNECTIONS (mounted on the rearside of the organ)

DESIGN	LAB		REV.
DRAWN	VERSCHOOR	21-01-93	
WESLEY PRESTO			PAGE 2

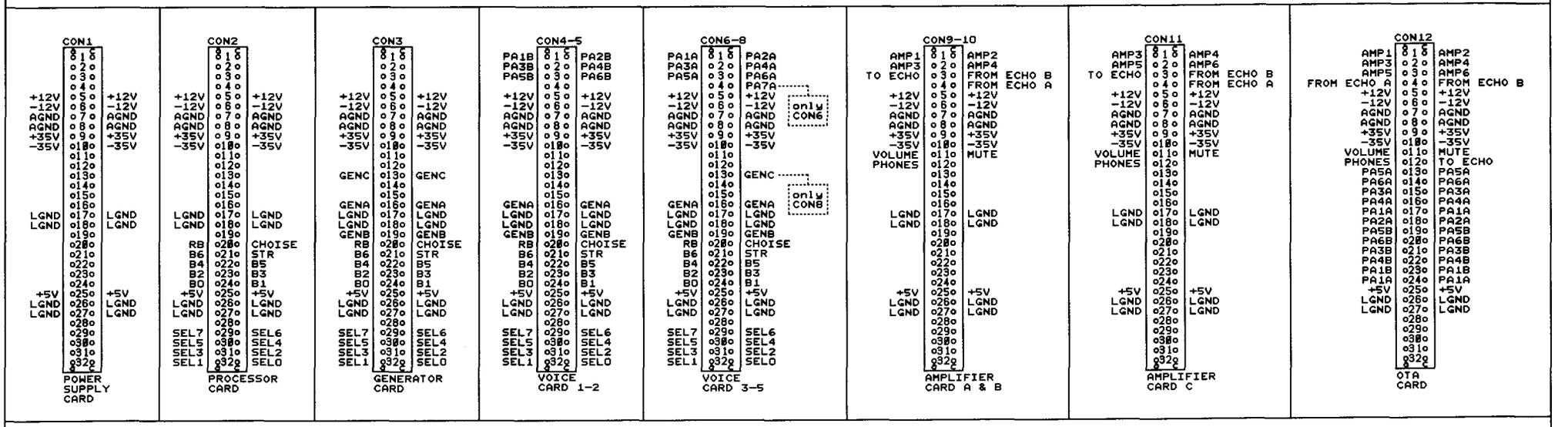

PINNING BUS CARD CONNECTORS

DESIGN	LAB		REV.
DRAWN	VERSCHOOR	21-01-93	
WESLEY PRESTO			PAGE 3

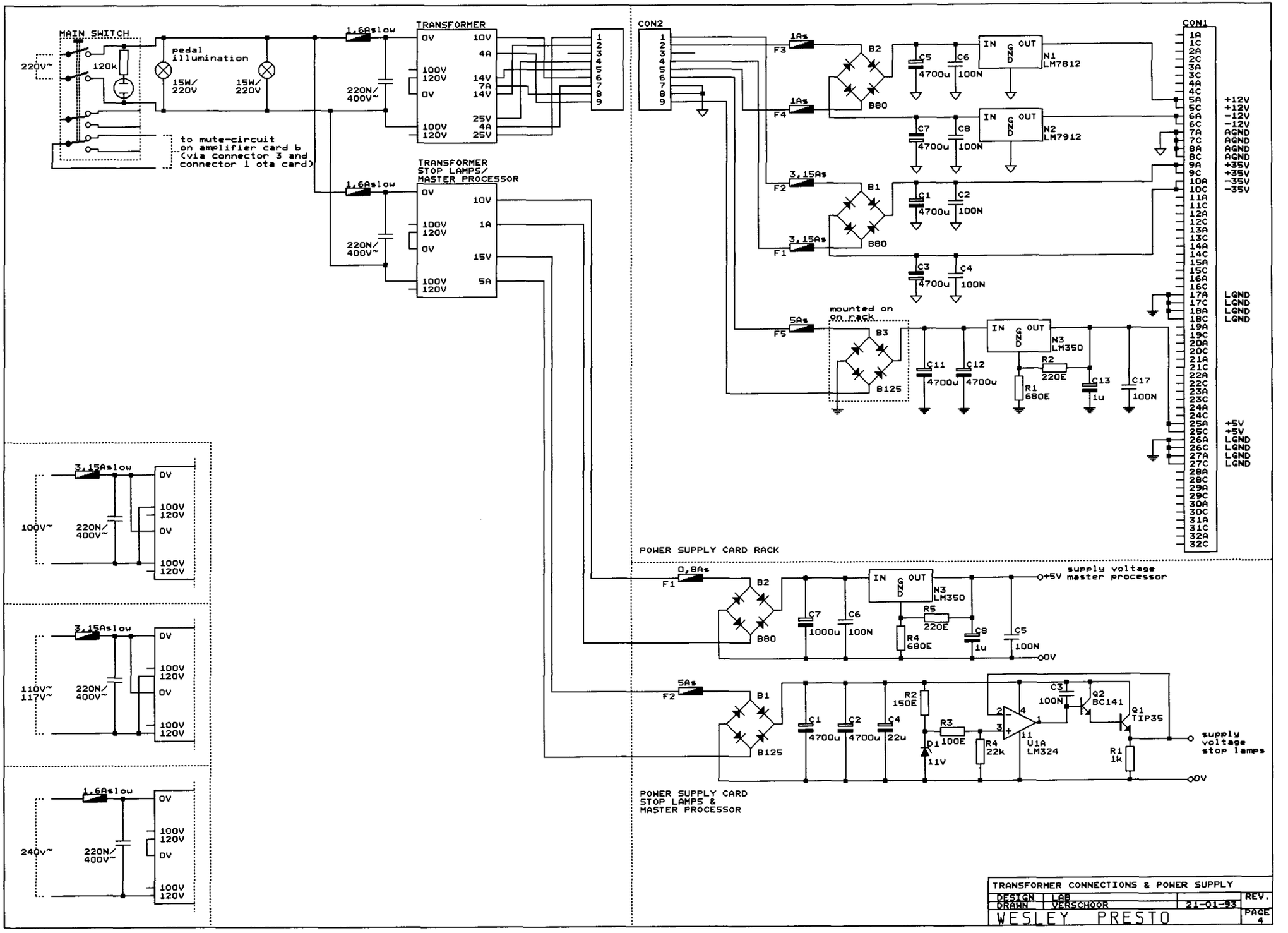
MAIN SWITCH
220V~
120k
pedal illumination
15W/ 220V
15W/ 220V
to mute-circuit on amplifier card b (via connector 3 and connector 1 ota card)
1,6Aslow
220N/ 400V~
TRANSFORMER
0V
10V
4A
100V 120V
14V
7A
0V
14V
25V
100V 120V
4A
25V
TRANSFORMER STOP LAMPS/ MASTER PROCESSOR
1A
15V
5A
CON2
CON1
F3
F4
F2
F1
F5
1As
3,15As
5As
B2
B1
B80
B125
B3
C5
C6
C7
C8
C1
C2
C3
C4
C11
C12
C13
C17
4700u
100N
1u
N1 LM7812
N2 LM7912
N3 LM350
IN
OUT
GND
R1 680E
R2 220E
mounted on on rack
+12V
-12V
AGND
+35V
-35V
LGND
+5V
POWER SUPPLY CARD RACK
0,8As
1000u
R4 680E
R5 220E
supply voltage master processor
POWER SUPPLY CARD STOP LAMPS & MASTER PROCESSOR
R2 150E
R3 100E
R4 22k
D1 11V
22u
U1A LM324
Q1 TIP35
Q2 BC141
R1 1k
supply voltage stop lamps
3,15Aslow
100V~
110V~ 117V~
240V~
TRANSFORMER CONNECTIONS & POWER SUPPLY
DESIGN LAB
DRAWN VERSCHOOR
21-01-93
REV.
PAGE 4
WESLEY PRESTO

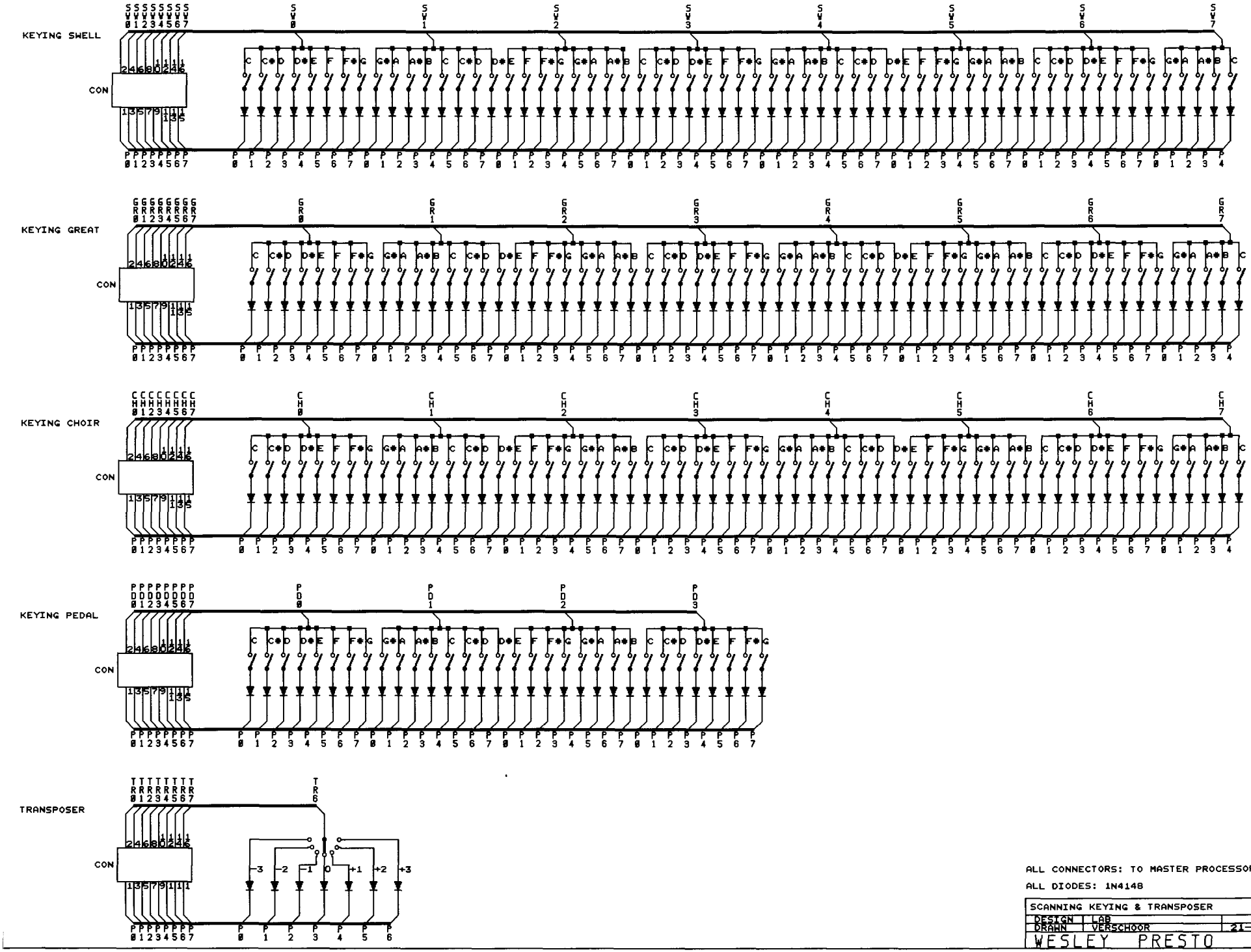

ALL CONNECTORS: TO MASTER PROCESSOR

ALL DIODES: 1N4148

SCANNING KEYING & TRANSPOSER			
DESIGN	LAB		REV.
DRAWN	VERSCHOOR	21-01-93	
WESLEY PRESTO			PAGE 5

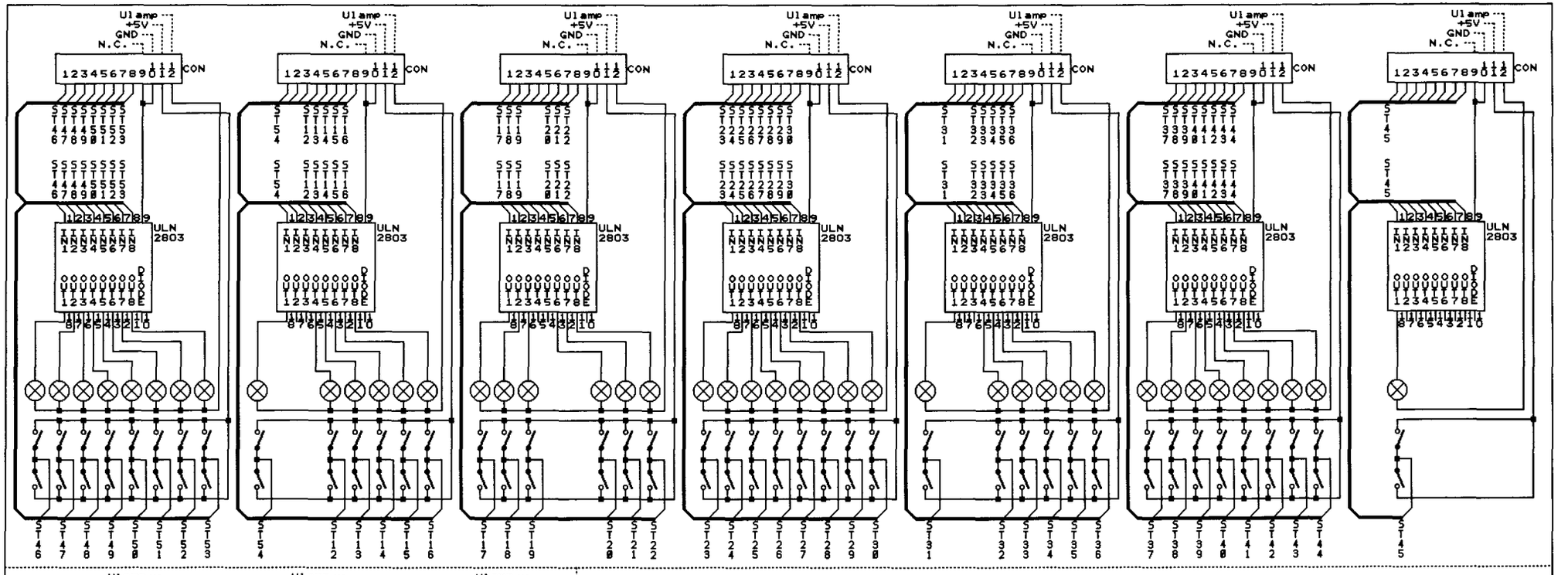

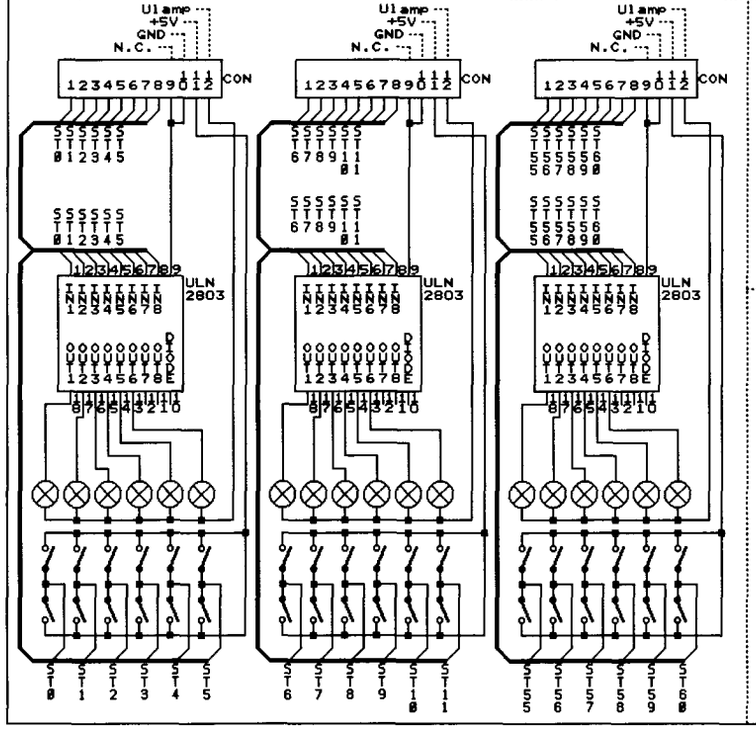

SWITCH-BANK CAPTURE SYSTEM

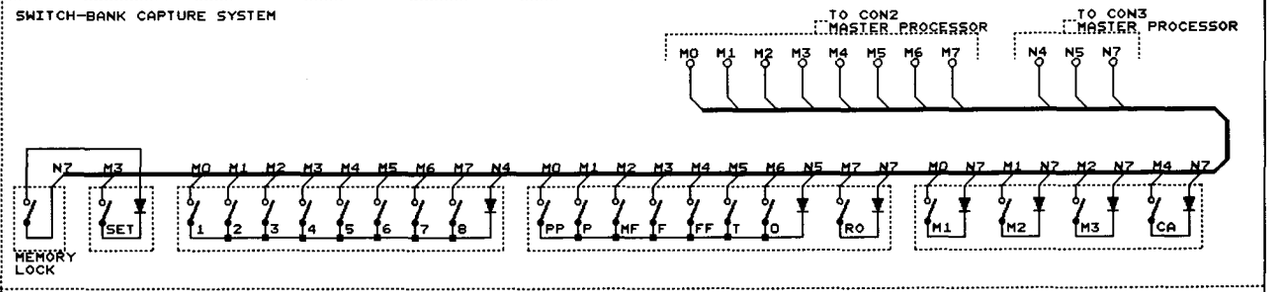

STOPLIST

PEDAL

ST0 = PRINCIPAL 16'
ST1 = SUBBASS 16'
ST2 = OCTAVE 8'
ST3 = GEDACKT 8'
ST4 = CHORALBASS 4'
ST5 = OPENFLUTE 4'
ST6 = FLUTE 2'
ST7 = MIXTURE III
ST8 = BOMBARDE 32'
ST9 = CONTRA TRUMPET 16'
ST10 = TRUMPET 8'
ST11 = CLARION 4'

CHOIR

ST12 = BOURDON 8'
ST13 = SALICIONAL 8'
ST14 = PRESTANT 4'
ST15 = ROHRFLUTE 4'
ST16 = CONICAL FLUTE 2'
ST17 = NASARD 1 1/3'
ST18 = MIXTURE IV
ST19 = CLARINET 8'

GREAT

ST20 = BOURDON 16'
ST21 = OPEN DIAPASON 8'
ST22 = GAMBA 8'
ST23 = ROHRFLUTE 8'
ST24 = PRINCIPAL 4'
ST25 = NACHTHORN 4'
ST26 = NAZARD 2 2/3'
ST27 = OCTAVE 2'
ST28 = BLOCKFLUTE 2'
ST29 = CORNET IV
ST30 = MIXTURE III-V
ST31 = TRUMPET 8'

SWELL

ST32 = OPEN DIAPASON 8'
ST33 = HOHLFLUTE 8'
ST34 = VIOLA 8'
ST35 = CELESTE 8'
ST36 = OCTAVE 4'
ST37 = COPPELFLUTE 4'
ST38 = FLUTE TWELFTH 2 2/3'
ST39 = WALDFLUTE 2'
ST40 = TIERCE 1 3/5'
ST41 = SIFFLUTE 1'
ST42 = RAUSCHEPFEIFE IV-VI
ST43 = FAGOTTO 16'
ST44 = CROMORNE 8'
ST45 = HOBO 8'

ACCESSORIES

ST46 = CHOIR TO GREAT
ST47 = SWELL TO GREAT
ST48 = SWELL TO CHOIR
ST49 = CHOIR TO PEDAL
ST50 = GREAT TO PEDAL
ST51 = SWELL TO PEDAL
ST52 = TREMULANT CHOIR
ST53 = TREMULANT GREAT
ST54 = TREMULANT SWELL
ST55 = CHORUS
ST56 = MANUAL BASS
ST57 = MIDI TO CHOIR (CHAN. 1)
ST58 = MIDI TO GREAT (CHAN. 2)
ST59 = MIDI TO SWELL (CHAN. 3)
ST60 = MIDI TO PEDAL (CHAN. 4)

ALL CONNECTORS: TO MASTER PROCESSOR

ALL STOPLAMPS: 14Vdc/75mA

STOPLIST

STOP-BANK & SWITCH-BANK CAPTURE SYSTEM			
DESIGN	LAB		REV.
DRAWN	VERSCHOOR	22-01-93	
WESLEY PRESTO			PAGE 6

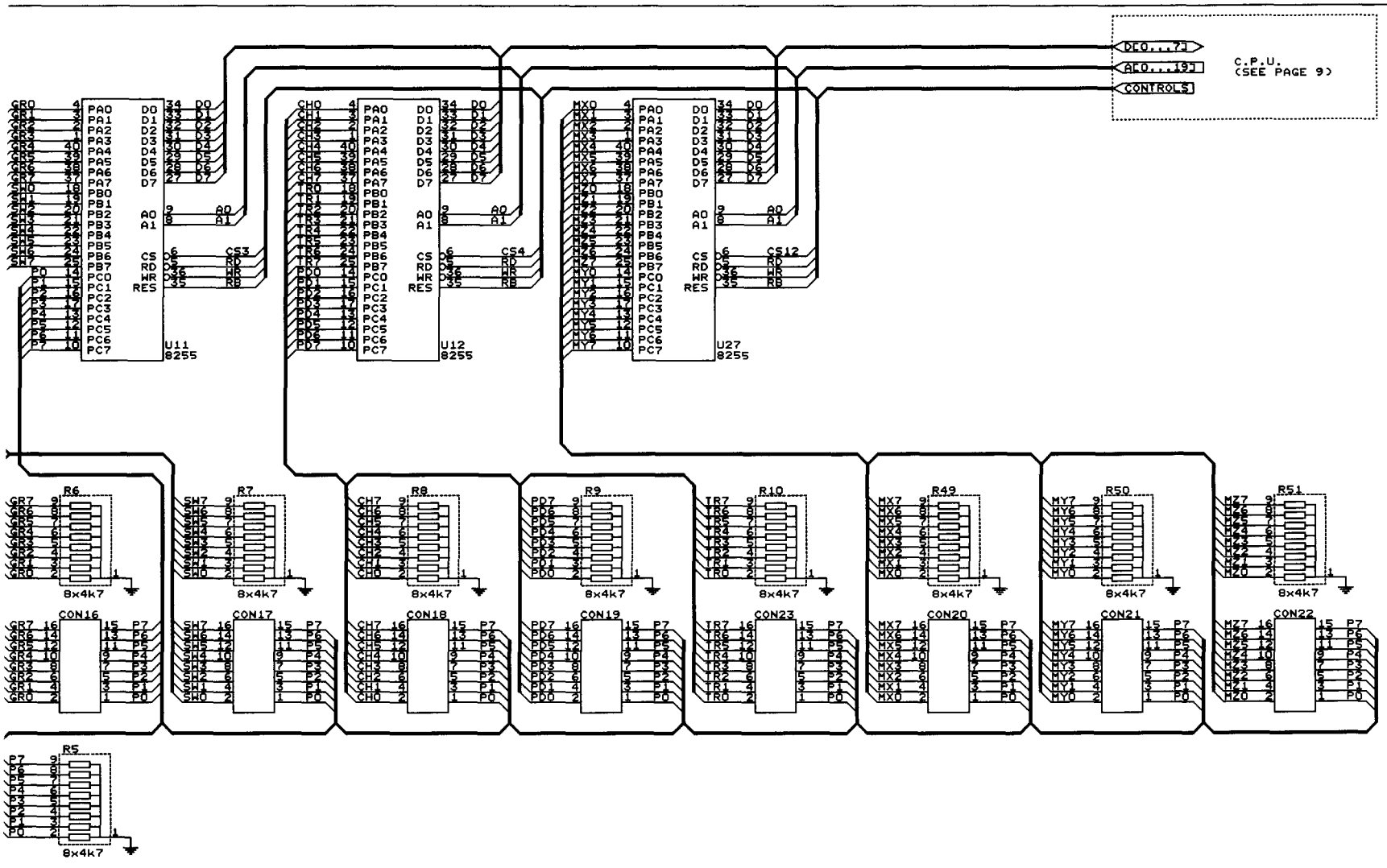

INPUT CIRCUIT SCANNING KEYING & TRANSPOSER
(master processor)

DESIGN	LAB		REV.
DRAWN	VERSCHOOR	22-01-93	
WESLEY PRESTO			PAGE 7

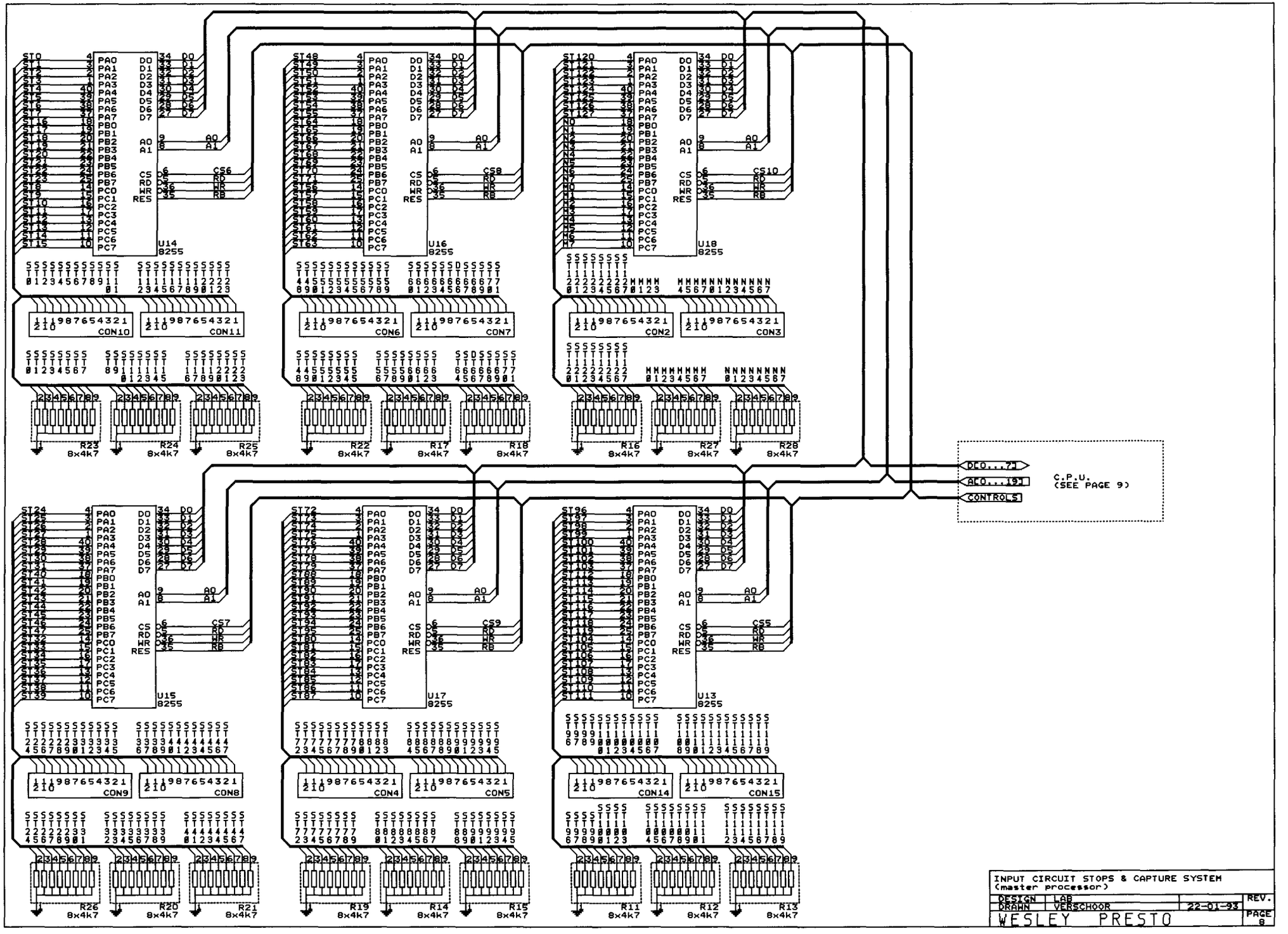
U14 8255
U16 8255
U18 8255
U15 8255
U17 8255
U13 8255
CON10
CON11
CON6
CON7
CON2
CON3
CON9
CON8
CON4
CON5
CON14
CON15
R23 8x4k7
R24 8x4k7
R25 8x4k7
R22 8x4k7
R17 8x4k7
R18 8x4k7
R16 8x4k7
R27 8x4k7
R28 8x4k7
R26 8x4k7
R20 8x4k7
R21 8x4k7
R19 8x4k7
R14 8x4k7
R15 8x4k7
R11 8x4k7
R12 8x4k7
R13 8x4k7
DC0...7
AC0...19
CONTROLS
C.P.U.
(SEE PAGE 9)
INPUT CIRCUIT STOPS & CAPTURE SYSTEM
(master processor)
DESIGN LAB
DRAWN VERSCHOOR
22-01-93
REV.
WESLEY PRESTO
PAGE 8

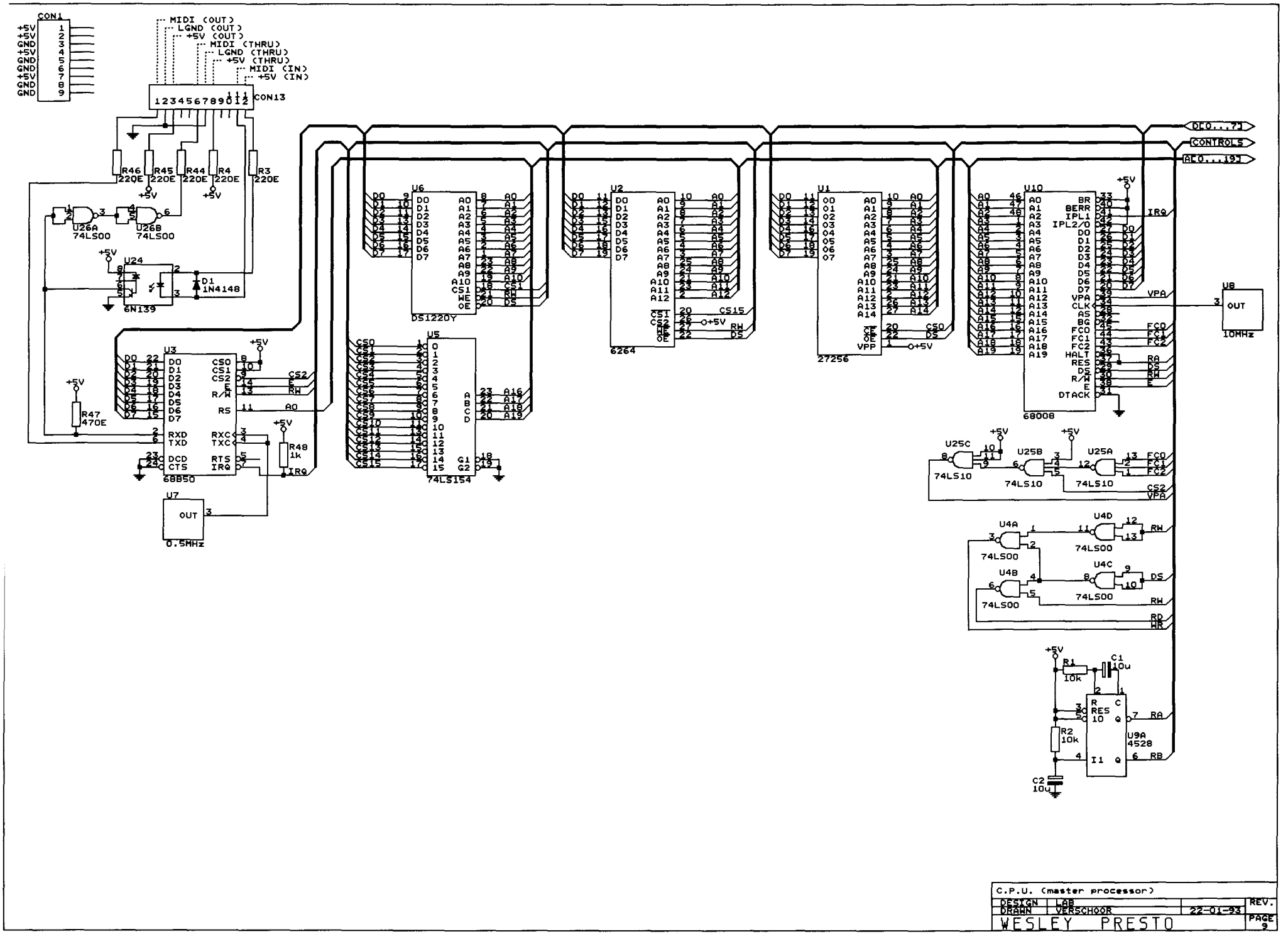

C.P.U. (master processor)

DESIGN	LAB		REV.
DRAWN	VERSCHOOR	22-01-93	
WESLEY PRESTO			PAGE 9

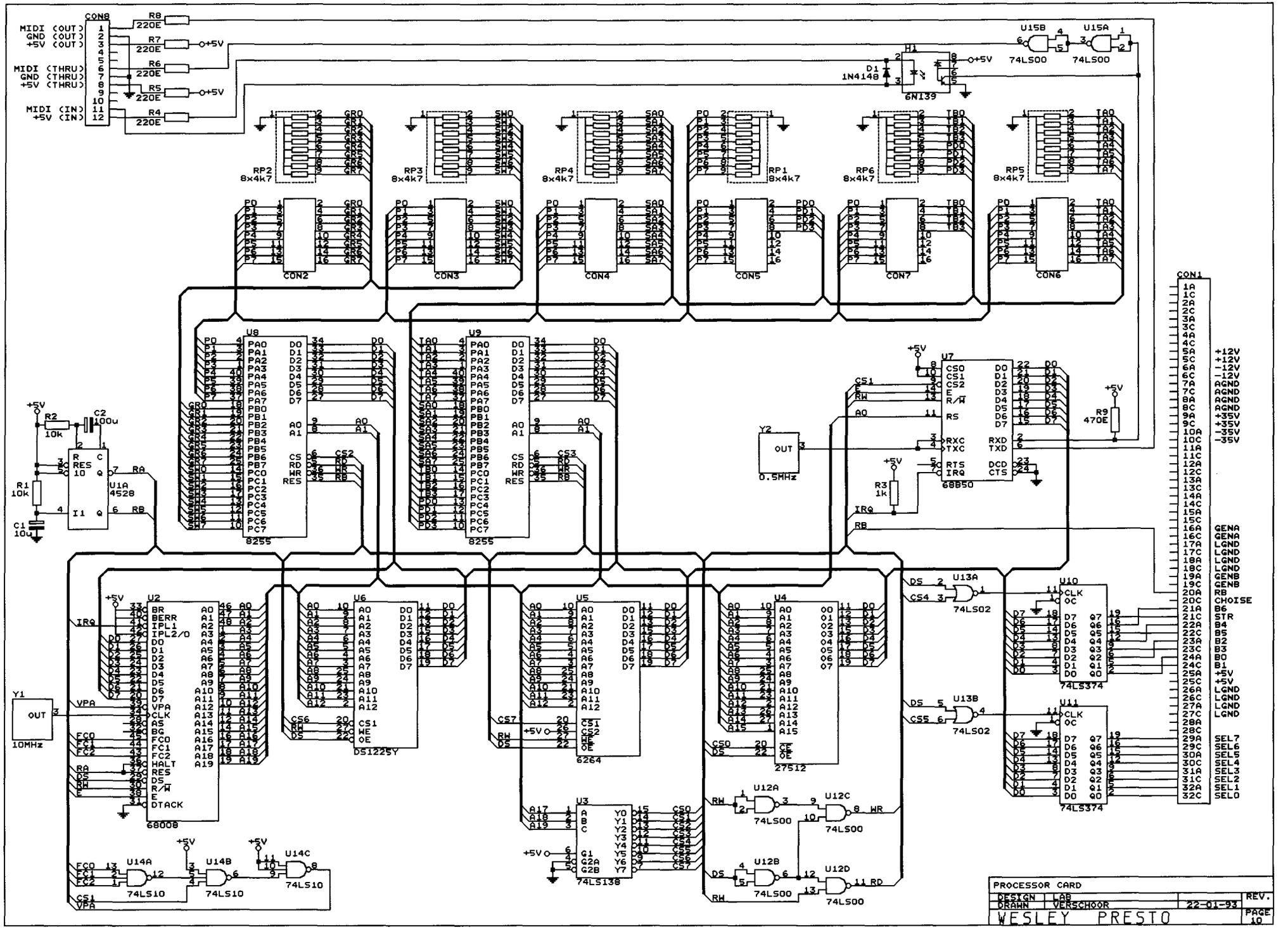
CON8
MIDI (OUT)
GND (OUT)
+5V (OUT)
MIDI (THRU)
GND (THRU)
+5V (THRU)
MIDI (IN)
+5V (IN)
R8 220E
R7 220E
R6 220E
R5 220E
R4 220E
+5V
U15B 74LS00
U15A 74LS00
H1 6N139
D1 1N4148
RP2 8x4k7
RP3 8x4k7
RP4 8x4k7
RP1 8x4k7
RP6 8x4k7
RP5 8x4k7
CON2
CON3
CON4
CON5
CON7
CON6
U8 8255
U9 8255
U7 68B50
Y2 0.5MHz
R9 470E
R3 1k
R2 10k
C2 100u
R1 10k
C1 10u
U1A 4528
U2 68008
Y1 10MHz
U6 DS1225Y
U5 6264
U4 27512
U3 74LS138
U13A 74LS02
U13B 74LS02
U10 74LS374
U11 74LS374
U12A 74LS00
U12B 74LS00
U12C 74LS00
U12D 74LS00
U14A 74LS10
U14B 74LS10
U14C 74LS10
CON1
+12V
-12V
AGND
+35V
-35V
GENA
LGND
GENB
CHOISE
B6
STR
B4
B5
B2
B3
B0
B1
SEL7
SEL6
SEL5
SEL4
SEL3
SEL2
SEL1
SEL0
PROCESSOR CARD
DESIGN LAB
DRAWN VERSCHOOR
22-01-93
REV.
WESLEY PRESTO
PAGE 10

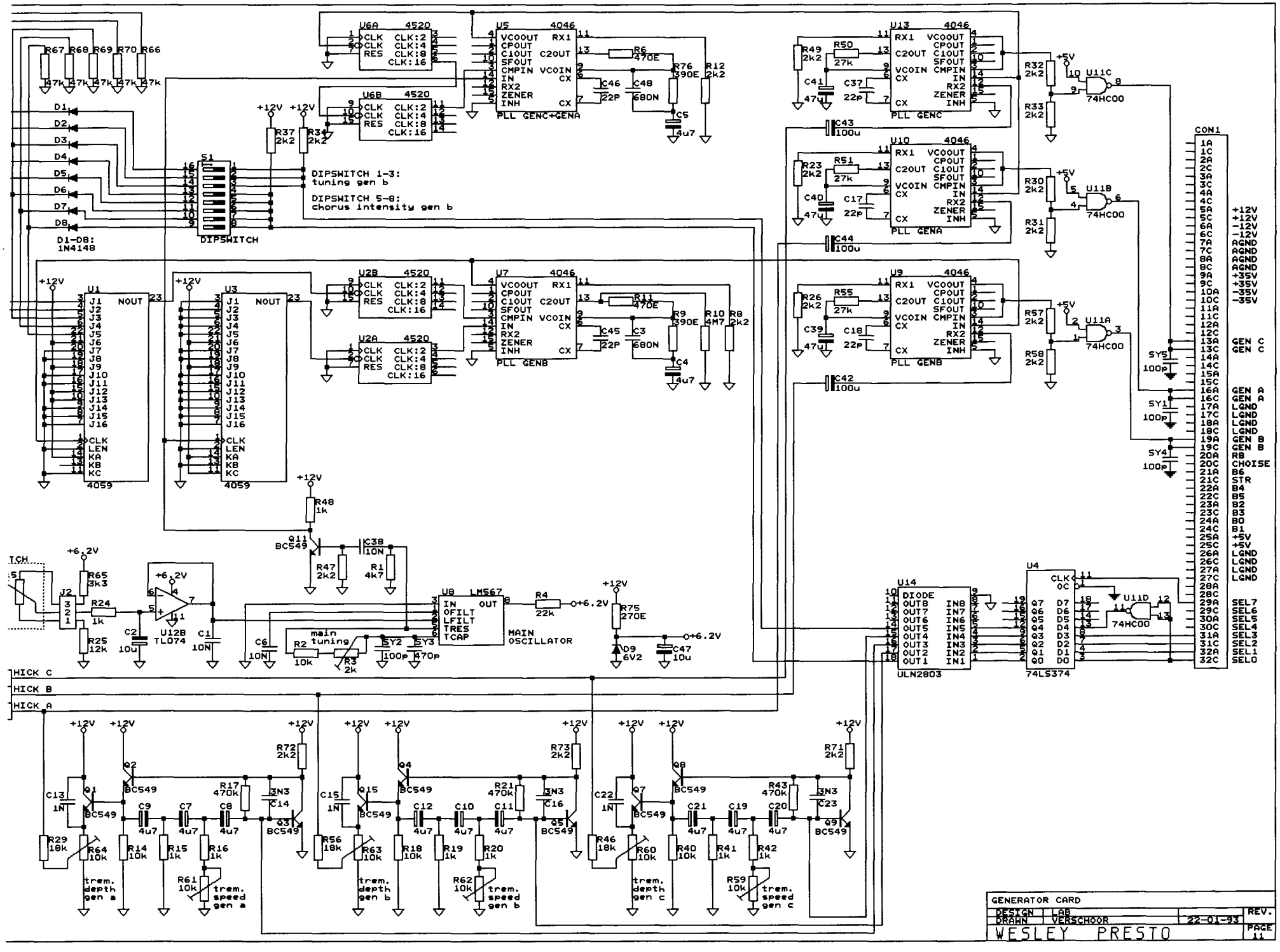
U6A 4520
U6B 4520
U5 4046
PLL GENC+GENA
U13 4046
PLL GENC
U10 4046
PLL GENA
U9 4046
PLL GENB
U7 4046
PLL GENB
U2B 4520
U2A 4520
U1 4059
U3 4059
S1
DIPSWITCH
DIPSWITCH 1-3:
tuning gen b
DIPSWITCH 5-8:
chorus intensity gen b
D1-D8:
1N4148
U11C 74HC00
U11B 74HC00
U11A 74HC00
U11D 74HC00
CON1
U8 LM567
MAIN OSCILLATOR
U12B TL074
U14 ULN2803
U4 74LS374
HICK C
HICK B
HICK A
trem. depth gen a
trem. speed gen a
trem. depth gen b
trem. speed gen b
trem. depth gen c
trem. speed gen c
GENERATOR CARD
DESIGN LAB
DRAWN VERSCHOOR 22-01-93
REV.
WESLEY PRESTO
PAGE 11

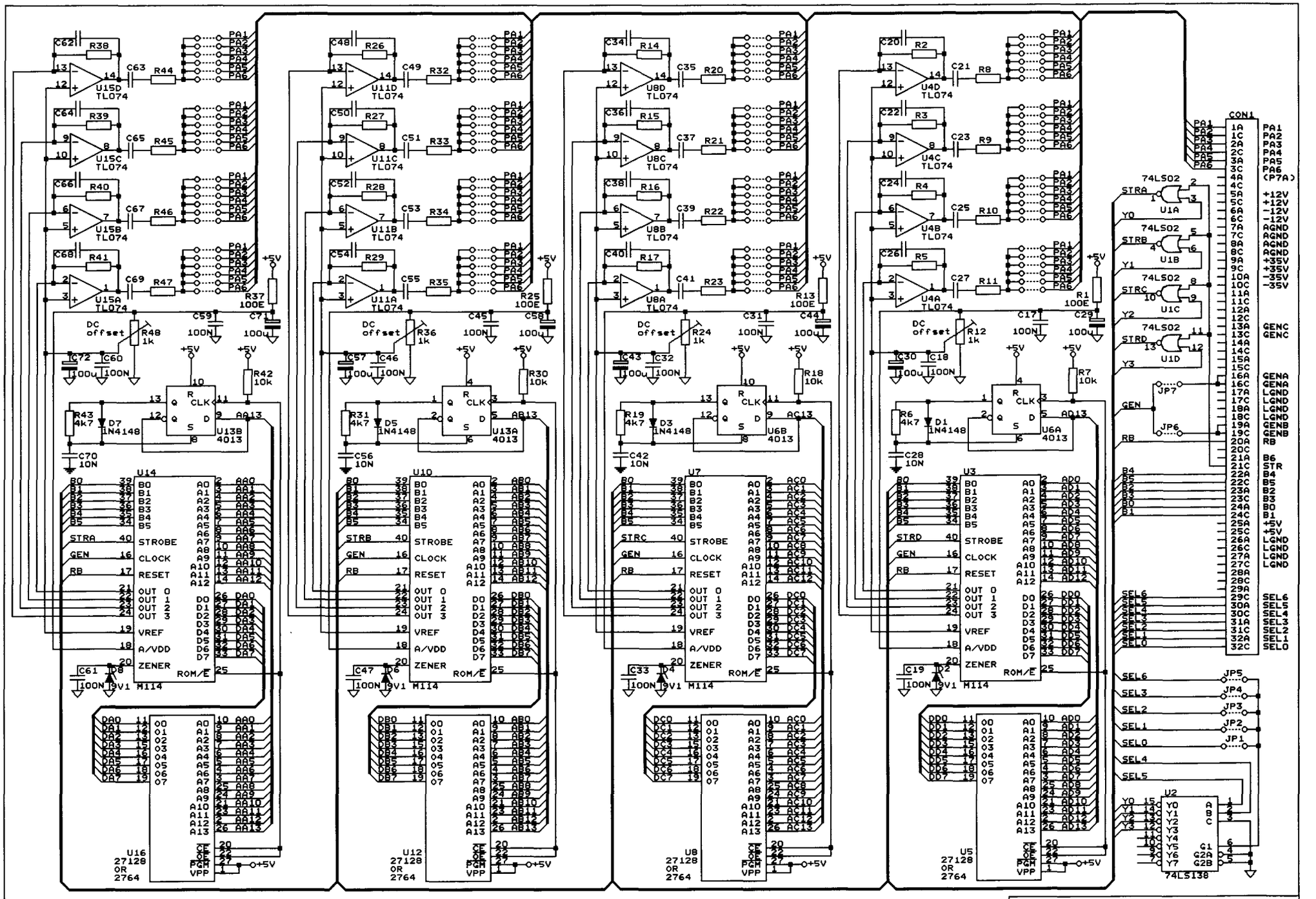

NOTE: IF FOR U5, U8, U12 OR U16 A 2764 EPROM IS PLACED INSTEAD OF A 27128 EPROM, THE 1/2 4013 (U6 AND U13) USED FOR SWITCHING THE UPPER 8K ROM AND THE LOWER 8K ROM, IS NOT NECESSARY.

VOICE CARD		REV.
DESIGN	LAB	
DRAWN	VERSCHOOR	22-01-93
WESLEY PRESTO		PAGE 12

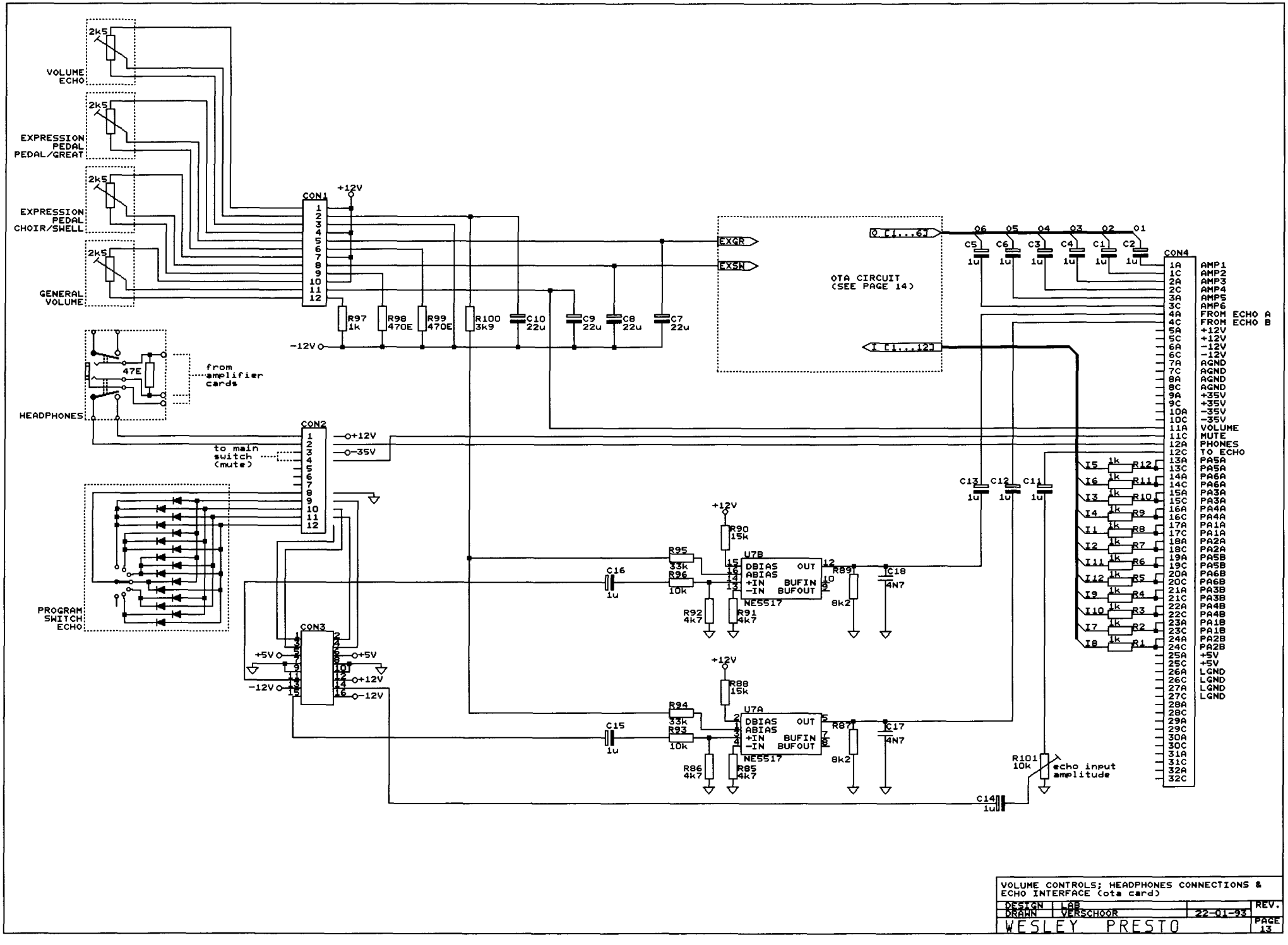

VOLUME CONTROLS; HEADPHONES CONNECTIONS & ECHO INTERFACE (ota card)

DESIGN	LAB		REV.
DRAWN	VERSCHOOR	22-01-93	
WESLEY PRESTO			PAGE 13

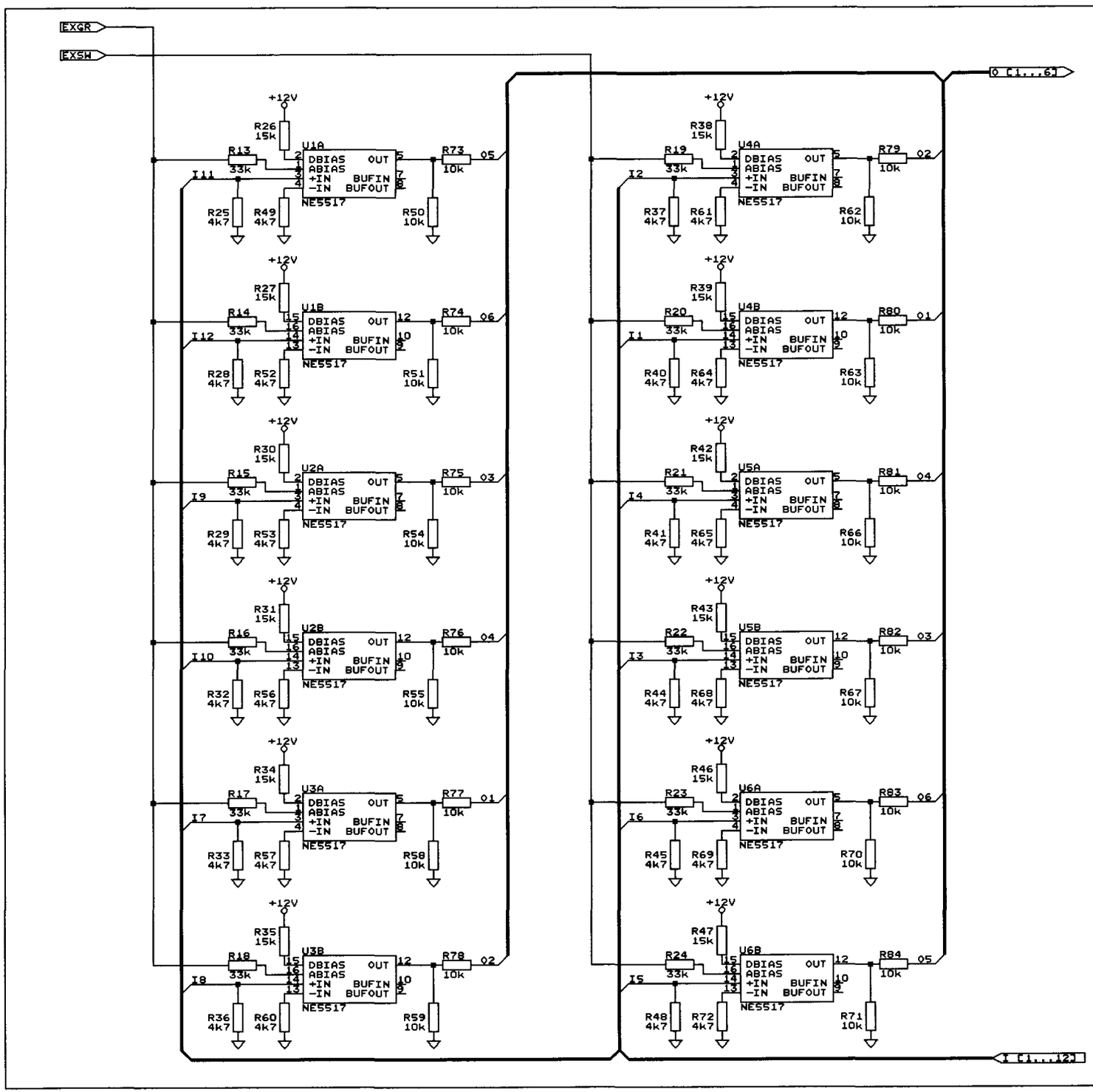

EXPRESSION PEDAL CIRCUIT (ota card)		
DESIGN	LAB	REV.
DRAWN	VERSCHOOR	22-01-93
WESLEY PRESTO		PAGE 14

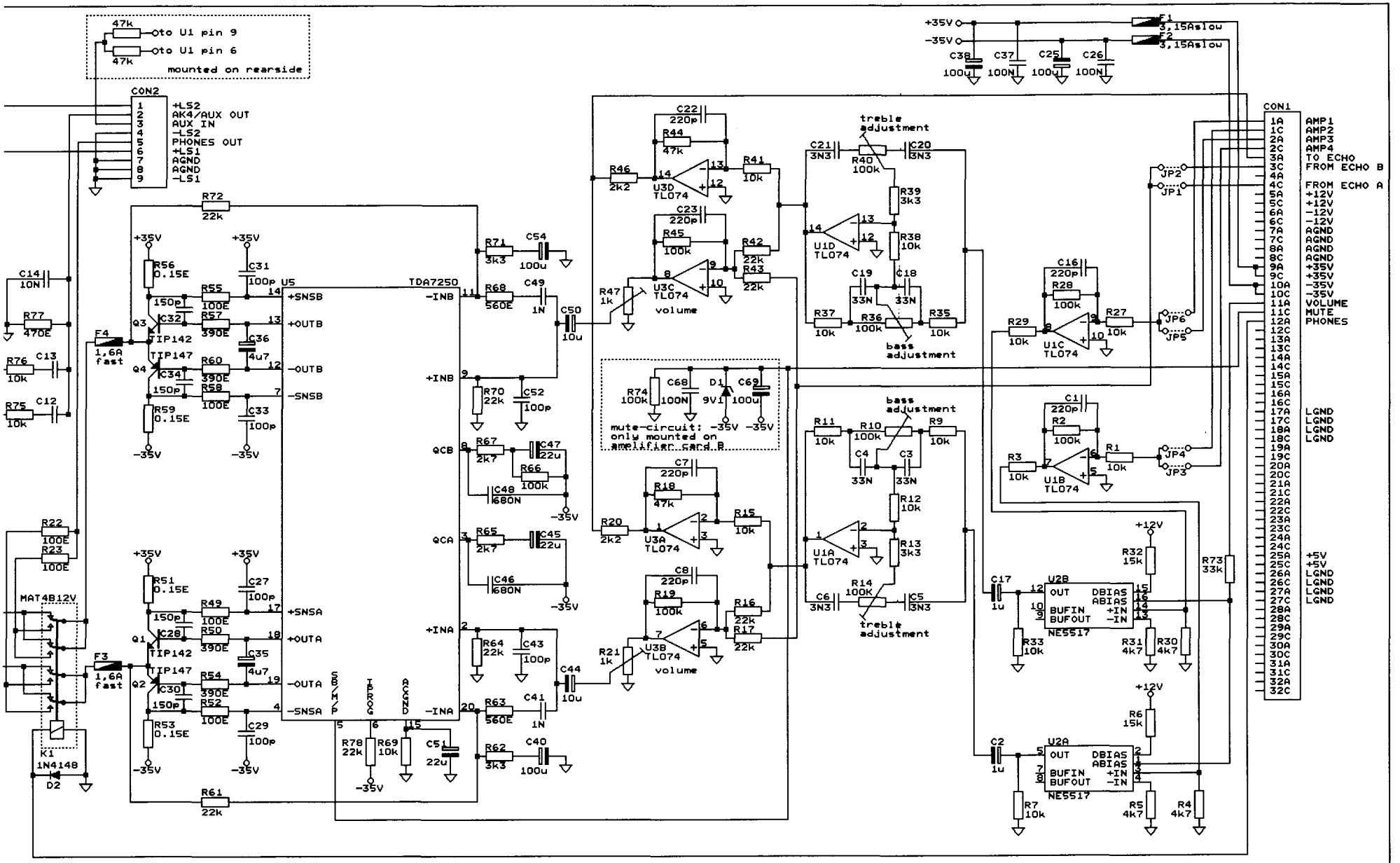

AMPLIFIER CARD			
DESIGN	LAB		REV.
DRAWN	VERSCHOOR	22-01-93	
WESLEY PRESTO			PAGE 15

GENERATOR CARD
(COMPONENT-SIDE VIEW)

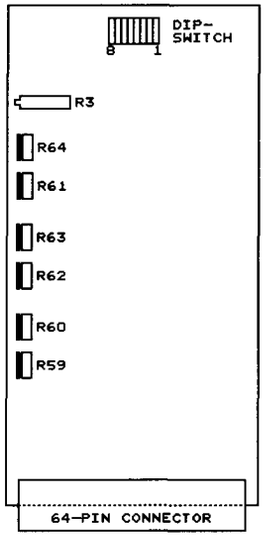

VOICE CARD
(COMPONENT-SIDE VIEW)

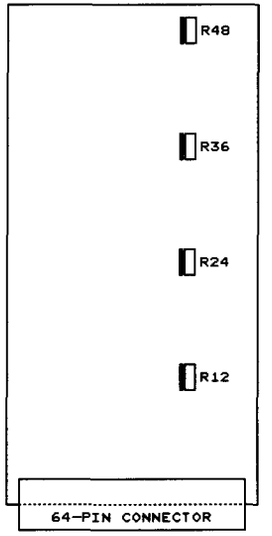

AMPLIFIER CARD
(COMPONENT-SIDE VIEW)

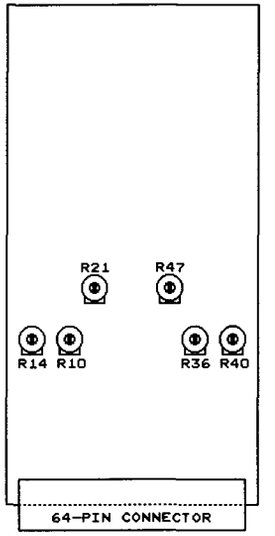

OTA CARD
(COMPONENT-SIDE VIEW)

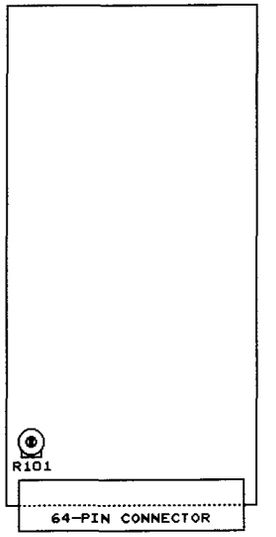

R3 = MAIN TUNING
R64 = TREMULANT DEPTH GREAT
R61 = TREMULANT SPEED GREAT
R63 = TREMULANT DEPTH SWELL
R62 = TREMULANT SPEED SWELL
R60 = TREMULANT DEPTH CHOIR
R59 = TREMULANT SPEED CHOIR
DS1-DS3 = TUNING SWELL
DS4-DS8 = CHORUS INTENSITY SWELL

R12 = DC-OFFSET VOICE D
(DISTORSION VOICE D)
R24 = DC-OFFSET VOICE C
(DISTORSION VOICE C)
R36 = DC-OFFSET VOICE B
(DISTORSION VOICE B)
R48 = DC-OFFSET VOICE A
(DISTORSION VOICE A)

NOTE: R12-R24-R36-R48 ARE NOT FOR CHANGING VOLUMES!!

TURNING THESE POTENTIOMETERS WILL GIVE DISTORSION!!

R10 = BASS LEFT AMPLIFIER
R14 = TREBLE LEFT AMPLIFIER
R21 = VOLUME LEFT AMPLIFIER
R36 = BASS RIGHT AMPLIFIER
R40 = TREBLE RIGHT AMPLIFIER
R47 = VOLUME RIGHT AMPLIFIER

R101 = INPUT AMPLITUDE ECHO

POSITION DIAGRAM ADJUSTMENTS
INTERNAL POTENTIOMETERS

DESIGN	LAB		REV.
DRAWN	VERSCHOOR	22-01-93	
WESLEY PRESTO			PAGE 16